SYSTEM WIRING DIAGRAMS
Interior Light Circuit (1 of 2)
1990 Mercedes-Benz 300E
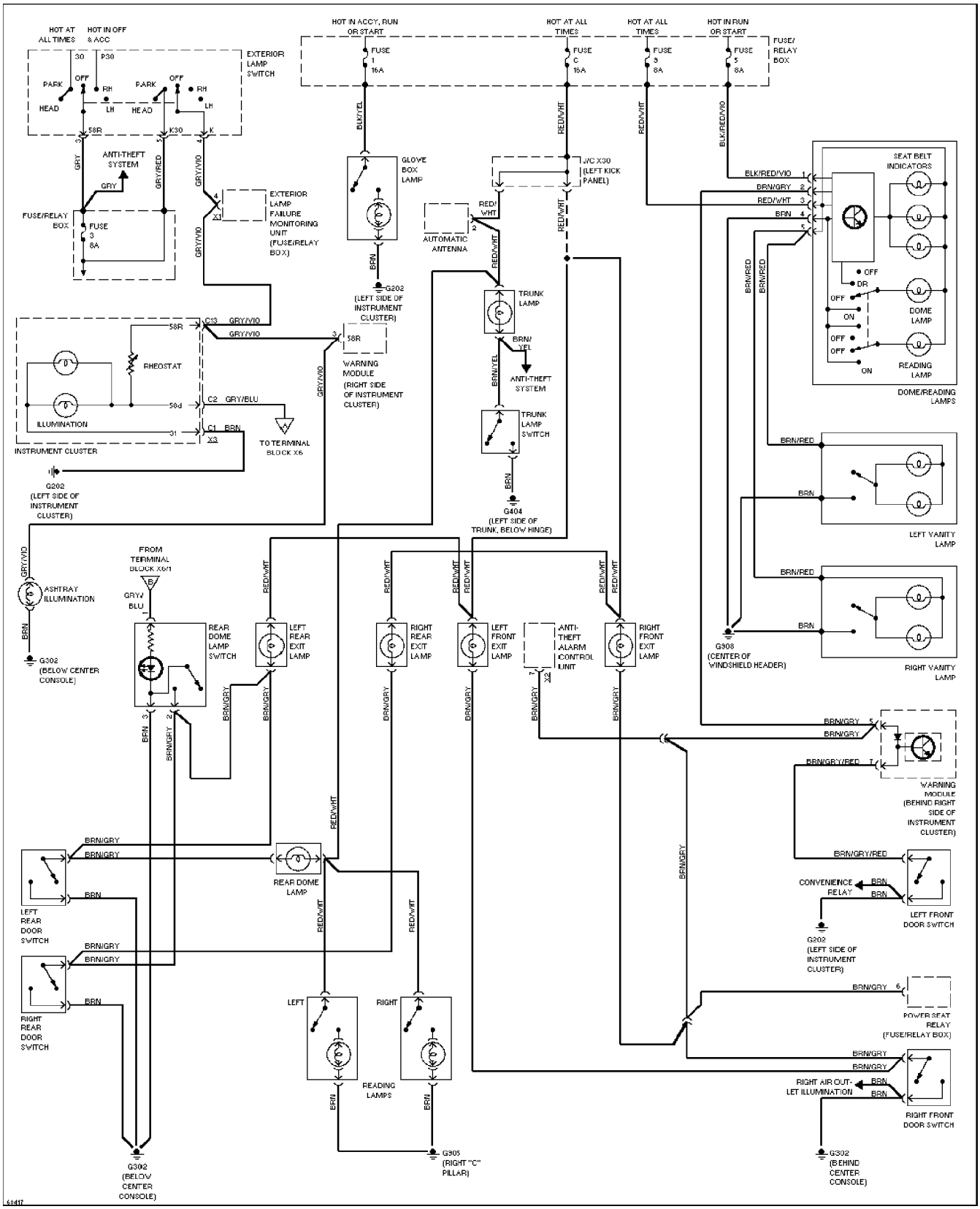
For DIAKOM-AUTO http://www.diakom.ru Taganrog support@diakom.ru (8634)315187
Copyright © 1998 Mitchell Repair Information Company, LLC
Thursday, November 30, 2000 11:56AM